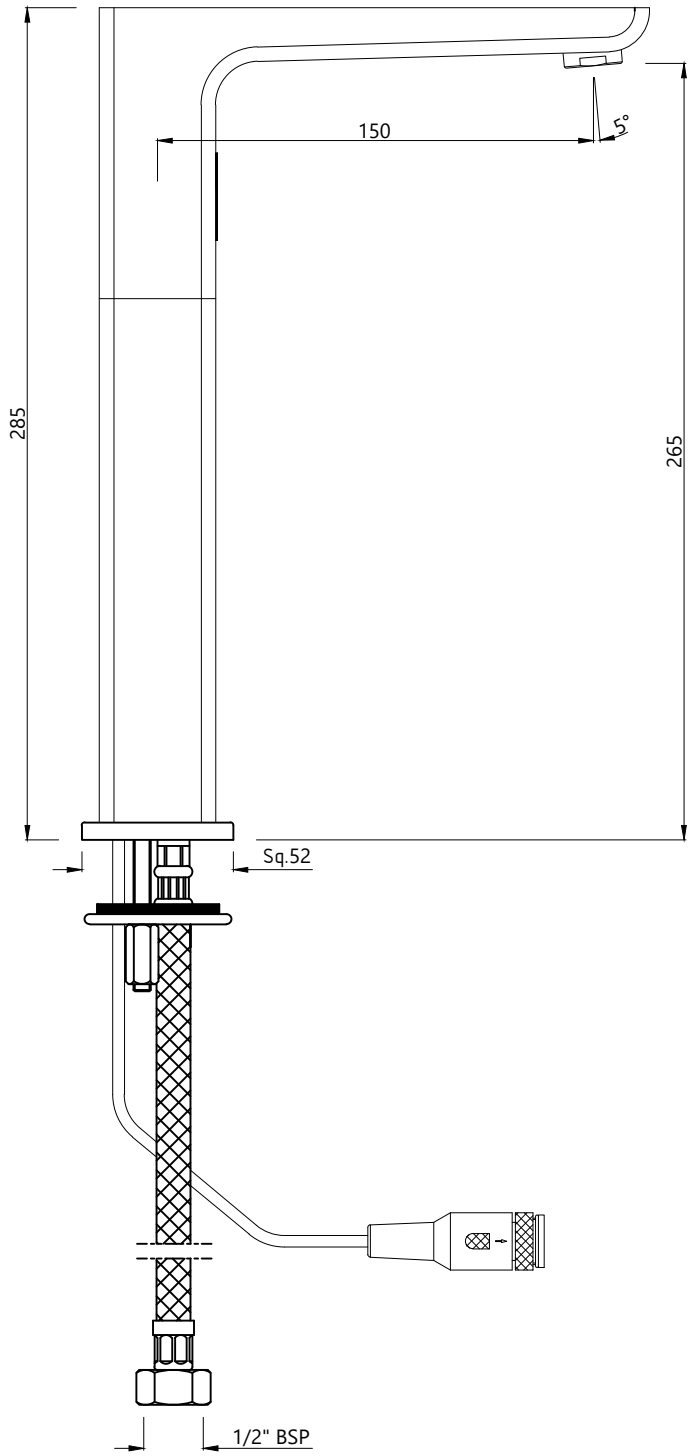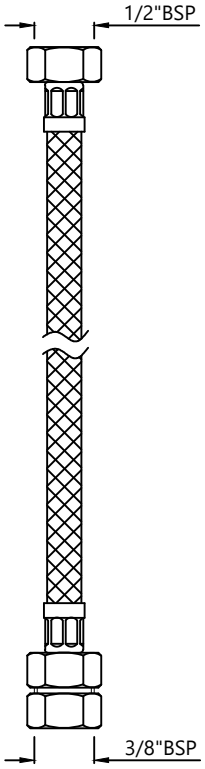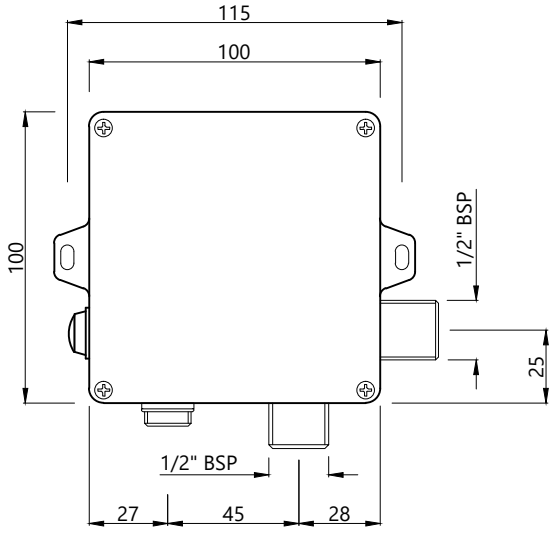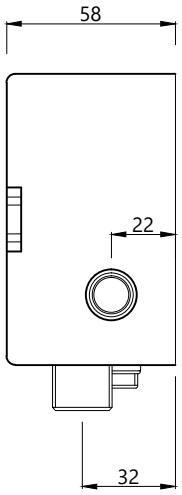Cat. No.-SNR-35017PMB10